FAI8/BP-1E

FA

Indicative image

M18 PHOTOELECTRIC SENSORS DC

- Complete range of M18 sensors with 10...30 Vdc power supply
- Axial and radial optic with flat surface
- Retro-reflective models for transparent objects detection, with red emission IP67 protection degree
- Metallic or plastic housing
- Sensitivity adjustment available for all models
- Total protection against any type of electric damages
- Approvals: CE and cULus listed

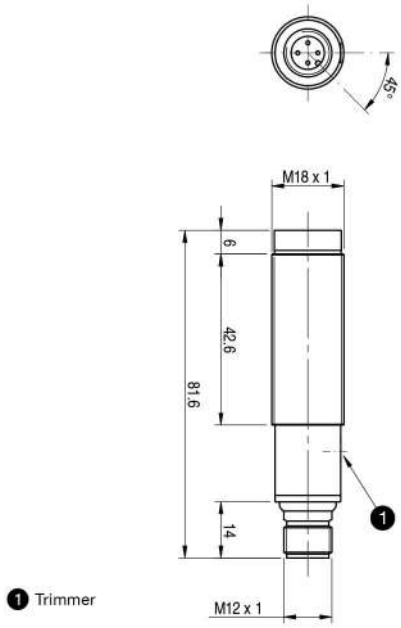

Detection properties

Nominal sensing distance	1000mm white target 90% Kodak 400x400mm
Thermal drift of Sr	≤10% Sr
Repeat Accuracy	5%
Sensitivity adjustment	Trimmer

Application

Function Principle	Diffuse reflection (long distance, >600mm)
Optic position	Axial

Outputs

Output type	PNP
Output Function	NO+NC
Switching frequency	250Hz

Electrical data

Operating Voltage	10...30Vdc
No-Load supply current	≤30mA
Load current	≤100mA
Leakage current	≤10µA
Output voltage drop	2V max. IL =100 mA
Max ripple content	10%
LED indicators	Yellow (Lon) or output status Lo/Do
Time delay before availability	≤200ms
Short-circuit protection	Short circuit (autoreset), Overvoltage
Reverse Polarity Protection	Polarity inversal, Inpulsive voltage
Emission	Infrared (880 nm)
Interference to external light	3000lux (incandescent lamp), 10000lux (sunlight)

Mechanical data

Dimensions	M18 x 1 / L =81,6mm
Weight	100g
Housing Material	Nickel plated brass / PC plug
Connections	M12 plug
Active Head Material	PC
Tightening torque	25Nm
Operating temperature	- 25°C...+ 70° C (Without freeze)
Diameter/Dimension	M18

Test/Approvals

Approvals	CE, cULus
EMC compatibility	EN 60947-5-2
Shocks and vibrations	Vibration IEC 60068-2-6 / Shock IEC 60068-2-27
Degree of protection	IP67

Accessories

Supplied Accessories	nuts M18 x 1, screwdriver

Generical Data

Dimensions	M18 x 1 / L =81,6mm
Operating Temperature	- 25°C...+ 70° C (Without freeze)
Mechanical Protection	IP67

ELECTRICAL DIAGRAMS OF THE CONNECTIONS

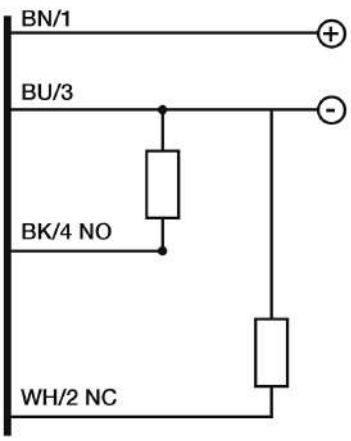

CONNECTOR

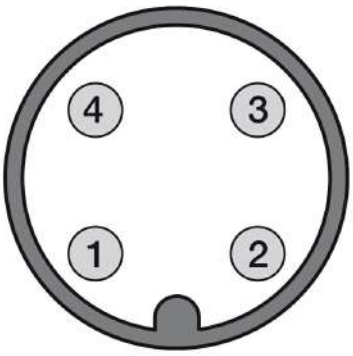

RESPONSE CURVES

Dimensione Spot

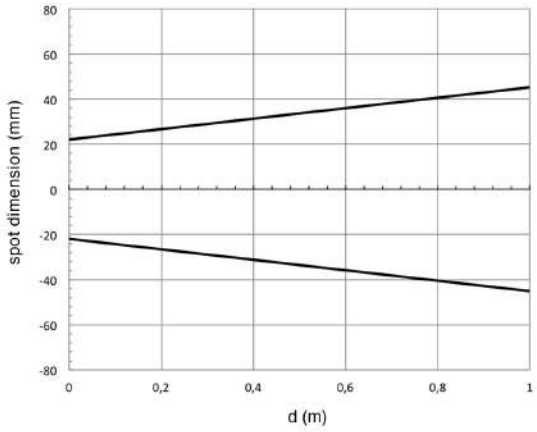

Parallel offset

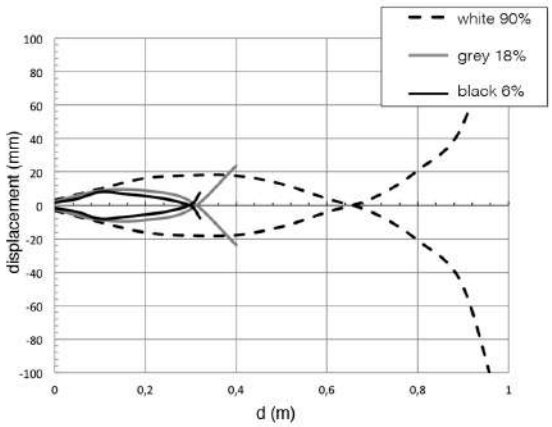

Excess of Earnings

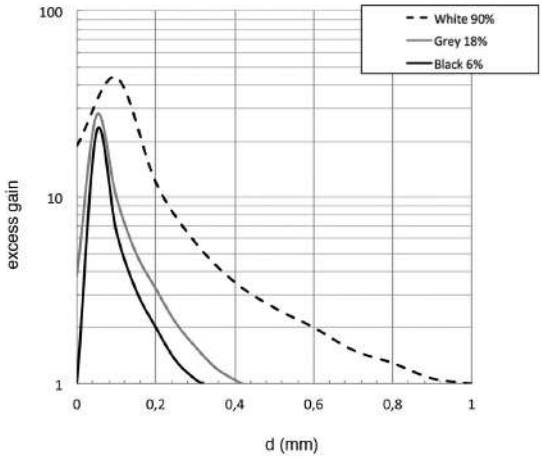

Datasensing S.r.l.
Strada S.Caterina, 235
41122 Modena (MO)
Tel. 059 420411
Fax 059 253973
E-mail info@datasensing.com

date of printing
30/07/2022 06:59:52